Introduction

In today's microwave practice, the directional coupler is a virtually indispensable measurement tool. It provides a simple, convenient, and accurate means for sampling microwave energy without moving parts and without the need for adjustments. Unlike other methods of power sampling involving probes or coupling loops, the directional coupler also provides the important capability of separating forward from reflected power. By selecting energy traveling only in one direction, as a function of the device directivity, accurate VSWR measurements can be facilitated, eliminating the mechanical motion needed with a slotted line. Attenuation measurements also become more accurate when directional couplers are used since reflection errors are eliminated.

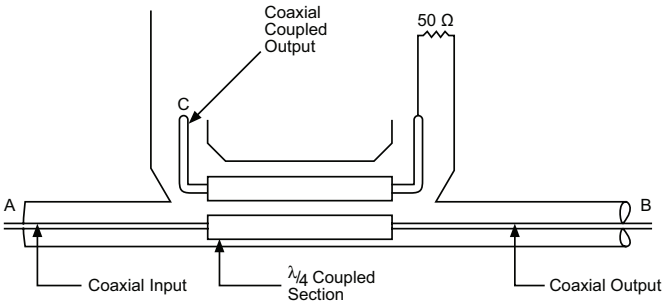

Figure 1. Diagram of a typical directional coupler

The basic construction of a coupled-line directional coupler can be seen in Figure 1, which illustrates a typical coaxial-line, microwave directional coupler such as might be used for microwave applications. It consists of two parallel striplines coupled over a length of approximately one-quarter wavelength. The mainline input (A) and output (B) coaxial lines are connected to one stripline; the other stripline is terminated in Z_o at one end, and is connected to the coupled output port through a coaxial line (C). The two sections, referred to respectively as the main and auxiliary lines, are separated from each other except for the coupling area, through which energy is unidirectionally coupled from the main line to the auxiliary line. An internal view of a typical Narda coaxial coupler is shown in Figure 2.

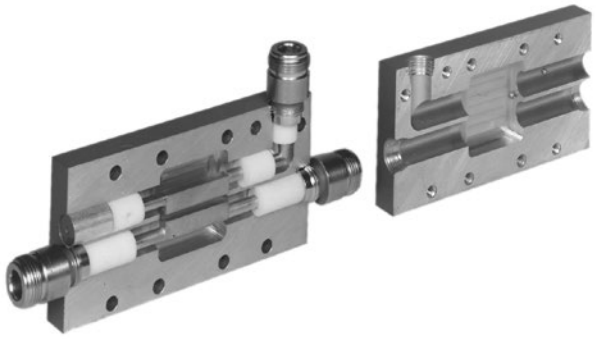

Figure 2. Internal view of a typical coaxial coupler

In operation, energy is fed into end A of the main line. Most of this energy will appear at the output end B. Some fraction of the energy, however, will appear at the output of the auxiliary line C, depending upon the amount of coupling provided in the design of the unit. Energy applied to end B of the main line will appear at A, but practically none of this energy will appear at the auxiliary output C. The degree of discrimination in the auxiliary line between energy flowing in the B to A direction and energy flowing in the A to B direction is the directivity of the coupler. Directivity is calculated as the ratio of the forward to reverse coupling, expressed in dB. Since the intention is to ensure that a minimum of reflected energy reaches the load on the auxiliary line, the ideal directional coupler will have an infinite value of directivity. The amount of coupling desired for forward power, however, will vary with the application. Consequently, coupling values from 6 dB to beyond 70 dB are frequently encountered.

Types Of Directional Couplers

Although a wide variety of configurations and packages have been built, most directional couplers fall into a relatively small number of well-defined types according to the intended service and sampling capabilities. Typical categories are: waveguide or coaxial, single- or dual-directional units, and combination types.

Coaxial directional couplers are offered for use at frequencies from 10 MHz to 40 GHz, and can be obtained with any of the standard or precision miniature coaxial

Couplers

connectors. Dual directional couplers, which permit simultaneous sampling of both forward and reflected energy, consist essentially of two directional couplers connected back to back in a single package and are available for coaxial systems. Figure 3 shows typical Narda directional coupler configurations.

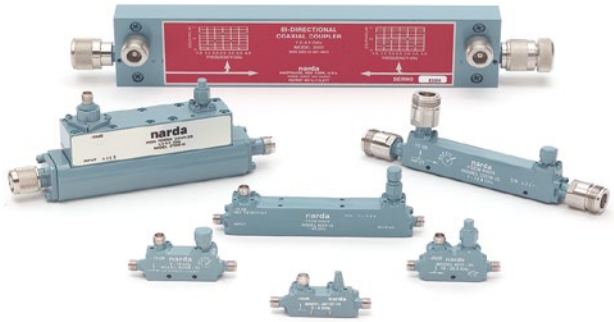

FIgure 3. High Directivity Directional Couplers

In addition, as special-order devices, a number of combination types are available, such as those which include couplers combined with detectors, referred to as directional detectors. For some applications, couplers are designed without the internal termination in the secondary line, permitting the user to terminate that line either with an absorbing load of his selection or with other RF instrumentation as desired.

Selection Features

Published specifications for directional couplers usually include coupling, directivity, insertion loss, main line and auxiliary line VSWR, bandwidth, frequency sensitivity and power handling capability. These and other terms commonly used in specifying coupler characteristics are defined below.

Coupling Coefficient - The ratio in dB of the incident power fed into the main port, to the coupled port power when all ports are terminated by reflectionless terminations. Some Narda couplers are principally used for power leveling, and the coupling coefficient of these couplers is expressed as the ratio in dB of the main-line power output to the power output at an auxiliary port.

Directivity - The ratio in dB of the power output at an auxiliary port, when power is transmitted in the preferred direction, to the power output at the same auxiliary port when the same amount of power is transmitted in the opposite direction. Reflectionless terminations are connected to all ports.

Insertion Loss - The change in load power, due to the insertion of a component in a transmission system, reflectionless terminations being connected to the ports of the inserted component.

Residual VSWR - The standing wave ratio measured by a reflectometer coupler terminated by a reflectionless termination, and fed from a nonreflecting generator. (Directivity or return loss expressed as a VSWR.)

Bandwidth - The range of frequencies within which performance, with respect to some characteristic, falls within specific limits.

Frequency Sensitivity (or Flatness) - The maximum peak-to-peak variation in coupling coefficient over a specified frequency band.

Tracking - The maximum change in the difference of the coupling coefficient ratio of two coupler paths.

The relative importance of each of these characteristics will, of course, vary with the particular application. It should be noted that some of these characteristics tend to conflict; for example, it is difficult to obtain both flatness over a broad bandwidth and high directivity. Selection of a coupler for each application thus requires evaluating the major performance parameters in terms of the intended service.

Coupling Coefficient

Narda directional couplers are offered in a choice of convenient standard and non-standard coupling values. While the standard coupling values of 6, 10, 20 and 30 dB are most common, several catalog models are available in alternative coupling values (13 or 16 dB, for example), including devices that provide up to 60 dB of coupling.

As is the case with the majority of our family of passive products, special models are available if they are required. Since our ability to provide a special coupler will be gated by the particulars of the requirement (volume factors, cost factors, etc.), we will often recommend the use of a standard-value coupler in conjunction with a fixed precision attenuator attached to the coupled port. With this configuration, any number of non-standard coupling values can be achieved very cost effectively.

The choice of the specific value of coupling coefficient will usually depend upon the power levels

involved. Where auxiliary (coupled) output is used to feed a measuring device, the coupling must provide adequate signal levels without overloading the equipment. It must be remembered, also, that any coupler takes power out of the main line, the magnitude of this drain being dependent upon the amount of coupling between the main and auxiliary lines. For example a 20 dB coupler will reduce the transmitted power by 1%, while a 6 dB coupler will reduce the transmitted power by 25%. In specifying coupling coefficient, therefore, it may be necessary to consider the amount of power loss that can be tolerated in the portion of the system following the coupler.

Coupling coefficient is measured with an absolute accuracy of ±0.1 dB per 10 dB. Flatness is measured to an accuracy of ±0.05 dB relative to other points.

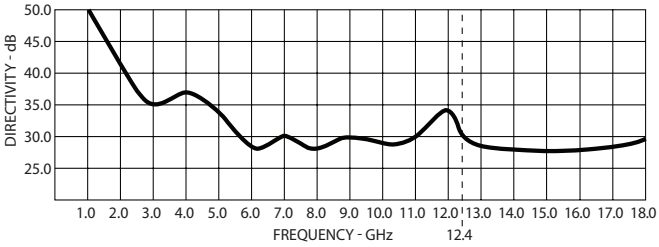

Figure 4. Typical directivity curve for Models 3292 and 5292 Broadband High Directivity Couplers

Directivity

In power measurements, the degree to which the auxiliary line is isolated from the load is of particular importance where high measurement accuracy is required. In power measuring application, where the absolute magnitude of the sample is the significant value, reverse coupling into the auxiliary line will alter the magnitude of this sample, with resulting measurement error. Errors from reflected power can be severe when the directivity is not adequate. In reflectometry, where the VSWR of a test piece is measured, accuracy is closely dependent upon the directivity of the coupler used. Here the effect of poor directivity is to introduce a residual reflection which adds to or subtracts from the reflected energy of the device. The graph in Figure 4 shows a typical directivity curve for Narda Models 3292 and 5292 Broadband High Directivity Couplers. These devices provide the hightest broadband directivity performance available.

Insertion Loss

The term "insertion loss" has the same significance with respect to directional couplers as for other components in a microwave system. That is, it describes the loss resulting from the insertion of the device into a transmission system.

Narda couplers now carry two insertion loss specifications: insertion loss, in accordance with the industry standard definition (see page 70); and insertion loss, excluding coupled power. This latter term allows for some ambiguity in characterizing couplers with coupling coefficients less than 15 dB. It is calculated value based on what the insertion loss would be if no power were coupled to the auxiliary port or ports. The insertion loss "excluding coupled power" specification is given in this catalog (where applicable) for reference only.

Voltage Standing Wave Ratio (VSWR)

In waveguide couplers, where coupling between main and auxiliary line is accomplished through holes or slots, VSWR can be held to very low levels, often no greater than that resulting from a typical flange mismatch. In coaxial couplers, the proximity effects, end effects and capacitive effects from the coupling bars employed generally result in higher values of VSWR. The major source of high VSWR in coaxial couplers, however, is usually found in the connectors employed. The particular structure of standard coaxial connectors introduces an appreciable amount of reflection. Consequently, where the application requires minimum reflection back into the main line, precision laboratory connectors are required.

Bandwidth

For laboratory applications, it is customary to select couplers with as broad a bandwidth as possible, simply because broad bandwidth affords greater flexibility in handling the changing day-to-day measurement tasks. Where bandwidth is under consideration it should be noted, however, that broad frequency range is usually accompanied by reduced directivity and increased VSWR. For very narrow bandwidths it is possible to maintain coupling coefficient to within 0.1 dB of nominal value and to achieve directivities over 40 dB. Where the coupler is required to operate over an octave frequency band the coupling tolerance may have to be

Couplers

increased. Thus, when a choice is possible, it is best to specify the narrowest bandwidth compatible with the application requirements.

Frequency Sensitivity

Directional couplers are available in single and multi-section design. Single (1/4 λ) section couplers exhibit frequency response similar to that shown in Figure 5, Curve A. The multi-section type couplers exhibit a flat frequency response over their frequency range as shown in Figure 5, Curve B.

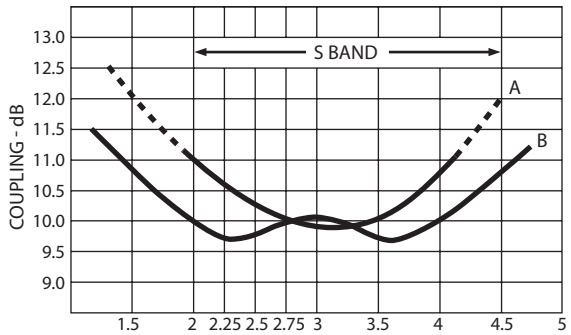

Figure 5. Typical response curves of single and multi-section directional couplers. Curve A represents 1/4λ; Curve B represents maximally flat response curve.

Where a band of frequencies must be sampled, as in swept-frequency measurements, the "flatness" or frequency sensitivity of the coupler is of major importance. Manufacturers differ in the method of specifying frequency sensitivity. In some instances, variation of coupling with frequency is expressed as the deviation from the nominal value; in others, as the excursion around the mean value of coupling over the range. Where couplers are to be used over a band of frequencies, manufacturers may provide a calibration chart showing the actual coupling as specified frequencies across the band. The Narda Model 3040 Series Maximally Flat Directional Couplers have a flatness specification of ±0.25 dB over an extended band and are, in addition, calibrated at five points within the octave.

Power Rating

Power ratings for directional couplers are usually specified for both CW power and peak pulse power, in both the forward and reverse directions. These ratings represent the maximum levels at which the unit can operate without altering its characteristics and/or cause irreversible damage to the device.

NOTE: For applicable Narda Couplers, Narda can supply standard test data for a nominal fee.

Applications

Power Measurements

Although the directional coupler finds a variety of uses as a power "splitter," in many applications it is used as a calibrated power sampler in a measurement system. Among its most common applications is the measuring or monitoring of microwave power. Because it can sample transmission line power by a definite known amount, accurate measurements can be conveniently made without interrupting operation of the system. The accuracy of measurement with a given detector-meter combination will depend upon the accuracy of sampling, that is, upon the absolute magnitude of the coupling. With the coupling coefficient known, the meter may be calibrated to provide a direct indication of power at the input to the coupler. Figure 6 is an example of such an application.

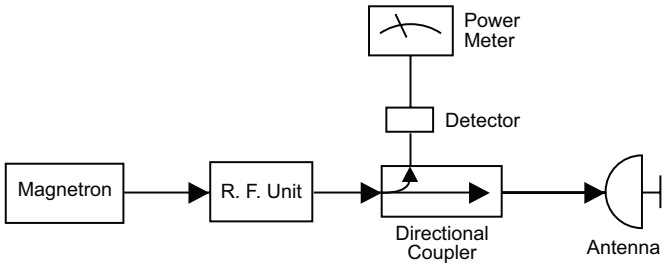

Figure 6. Directional couplers and power meters used for measuring power in the microwave portion of a radar system.

Frequency Measurements

The directional coupler is especially useful in measuring or monitoring frequency in operating systems since it permits measurements without disrupting operation. The requirement for uninterrupted operation, without interference from the measuring device, is met by using a resonant cavity wavemeter or a direct reading counter in conjunction with a directional coupler.

Signal Leveling

In swept frequency measurements, some form of signal leveling is virtually mandatory. Although sweep generators are available with leveled outputs, an external closed loop method of leveling is usually necessary to eliminate uncertainties introduced by cables and other components between the generator and the test piece.

Such a leveling loop can be conveniently arranged through the use of a directional coupler and detector.

Reflection Coefficient Measurements

The ability of swept-frequency techniques to provide broadband plots of microwave reflection characteristics (in a fraction of the time required for point-by-point measurements) affords obvious advantages. Speed and convenience are provided where testing time and costs are important considerations. Recognition of these advantages led to continuing refinement of swept-frequency reflectometer systems. As a result, a choice of swept-frequency techniques is now available for measuring reflection coefficient and VSWR in coaxial components, providing both the accuracy demanded for laboratory work and the speed and efficiency required for production-line testing. Improvements in coupler design and manufacturing techniques have significantly increased the accuracy of coaxial reflectometry. Today's reflectometer couplers provide directivities as much as an order of magnitude greater than previously obtainable.

In applications such as production-line testing, the reflectometer is a common method of measuring reflection coefficient, VSWR and impedance since this method offers advantages of speed and convenience, as the dual directional coupler (incorporating two auxiliary outputs) permits the simultaneous sampling of incident and reflected power.

Figure 7. Directional Coupler with SC Connectors

Purpose and Use of Equipment

Reflectometer couplers offer a significant cost savings over microwave vector network analyzers for production test stations and monitoring VSWR during environmental testing. The test set-up consists of a sweep generator, matching attenuator or isolator, scalar network analyzer, and a precision laboratory reflectometer coupler (Narda 3090 Series, 3020A, 3022, 3024 Dual Couplers and 3292 Broadband Couplers). Data can be stored in an electronic file or plotted for a paper copy. The reflectometer is excellent for detecting intermittent problems while a unit is under environmental test.

Principles of Reflectometer Operation

The reflectometer coupler consists of two precision airline directional couplers, with rigid structure enclosing the two couplers to ensure protection for the critical parts of the coupling mechanism. The coupled line impedances have been perfectly balanced.

Discontinuities where the transmission line connects to the coupling mechanism and at bead supports are designed for broadband impedance match to achieve the desired high directivity. Since the twin couplers are effectively positioned back-to-back, a portion of the RF microwave power applied to the input port is coupled out of the incident power port at a level 10 dB down from the applied power level. The remainder of applied power appears at the main line output port and is applied to the load. Coupling variations (also referred to as frequency sensitivity) between the main line input and coupled incident output ports are calibrated at five discrete frequencies within the octave bandwidth and vary not more than ±1.0 dB from the nominal 20 dB coupling value.

Figure 8. Coaxial Dual Directional Coupler

Couplers

The ability of a dual directional coupler to provide an accurate measure of incident or reflected power is enhanced by the tracking between the incident and reflected output ports. Therefore, the coupling variation of frequency sensitivity of the reflected output port should ideally be identical to that of the incident output port. RF power applied to the load is reflected to some degree depending on load characteristics, thereby resulting in a voltage standing wave ratio (VSWR) which is reflected back to the main line output port. This reflected power is coupled out of the reflected output port at a level 10 dB down from the reflected power level at the load. Since the tracking of the forward and reverse ports is held to a total of 0.3 dB, the coupling variation at the reflected output port closely follows that of the incident output port.

In addition to exhibiting excellent tracking characteristics, the dual directional coupler also features as high a directivity as possible. Directivity can be expressed as the ratio of power being coupled out of the reflected port, with the main line output terminated by a precision termination, to the power being coupled out of the incident port. If a portion of the incident power is coupled out of the reflected output port it essentially adds, randomly, to the reflected power from the load, thereby introducing an error. Likewise, if a portion of the reflected power appears at the incident output port, it adds to the normal incident coupled power. Therefore, a true measure of incident and reflected power for accurate determination of reflection coefficient and VSWR depends on coupler directivity; the higher the directivity, the more accurate the measurement. As previously mentioned, the reflectometer coupler exhibits a directivity of 45 dB minimum at L-band.

The single-ended coupler is a single air-line directional coupler for use in measuring transmission gain or loss characteristics in a swept measurement setup with the reflectometer coupler, or for use in RF power measurement setups. Besides exhibiting similar high directivity to the reflectometer coupler, in each of the five bands, the coupled output port (10 dB) of this device also provides tracking (0.3 dB) with respect to the incident port of the reflectometer set. As a result, simultaneous measurement of reflection coefficient and transmission gain or loss characteristics is possible in a single swept measurement system.

Design Theory

A coaxial directional coupler has the general appearance of a section of coaxial line, with the addition of a second parallel section of line and with one end terminated (see Figure 9).

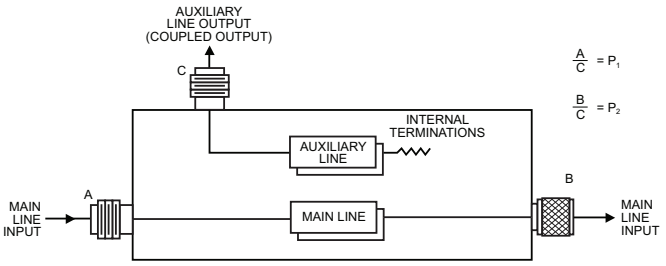

Figure 9. Single-Ended Coaxial Directional Coupler

These two sections are known as the main and auxiliary lines. The two lines are internally separated from each other; the amount of spacing between lines determines the amount of RF energy that may be transferred from the main line to the auxiliary line. In operation, assume that energy is fed into port A of the main line. Most of this energy will appear at output port B of the main line. However, a fraction of this energy (determined by coupling value) will also appear at the coupled port C, of the auxiliary line.

A dual-directional coaxial coupler, such as the reflectometer coupler, consists essentially of two single-ended couplers connected back-to-back. Perhaps the most important characteristic of the directional coupler (and the one from which its name originates) is its directivity.

Directivity and Coupling

Directivity means that energy entering output port B of the main line will appear at input port A, but practically none of the energy will appear at coupled output port C of the auxiliary line. This characteristic has wide application in the measurement of RF microwave power. The coupling of a directional coupler, therefore, is the ratio of the power fed into input port A of the main line to the power appearing at output port C of the auxiliary line; it is usually expressed in decibel (dB) and is calculated in the same manner as any other form of attenuation.

Directivity is a measure of isolation obtainable at coupled port C with power being fed into the main line at output port B. Directivity is calculated in the same

manner as previously indicated, except that the values of P_1 and P_2 refer, respectively, to the power at the auxiliary line output port C with power at the main line input port A, and the power at auxiliary output port C with the same power input at main line output port B. Since the intention is to have as little reflected energy as possible coupled out of port C, the values of directivity are usually high (25 to 40 dB), while the coupling values may range from as low as 10 dB to more than 30 dB.

A directional coupler is a very useful device for ensuring that an absolute minimum of energy in the reverse direction (such as reflected energy due to a load mismatch) reaches the detector or other device at port C of the auxiliary line. In a dual-directional coupler, reflected energy should appear at coupled output port D.

Confusion exists in many quarters as to why a considerable main-line VSWR does not interfere with the ability of a reflectometer coupler to measure low reflections. The following explanation should end this confusion: Power flow into test port B (Figure 10) is coupled directly to auxiliary line output port D with minimal reflections.

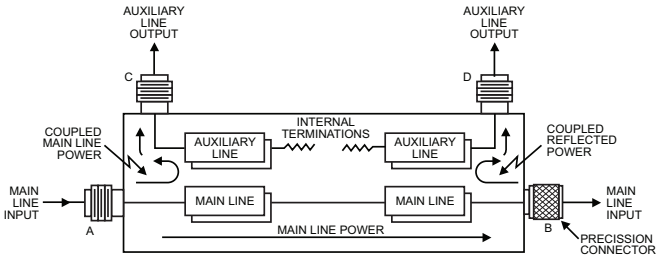

Figure 10. Dual Coaxial Directional Coupler

When using a coupler as a reflectometer, the directivity path includes only the connector and the transmission line to the decoupled port. When a signal is reflected from the test piece into port B, this reflected power will be coupled into the auxiliary line and will appear at the output port D. The VSWR of the reflected power is affected only by the output reflections on the main line.

Main-line VSWR is affected by the input connector, and by reflections all along the line, to the output connector. However, the main-line VSWR does not basically affect the above measurement at the coupled port because the major factors which contribute to the main line output VSWR are outside the path of the reflected power.

Main-line power is transmitted into the test port B direction towards the test piece. Ideally, any power that is coupled to the auxiliary line is absorbed by the internal termination. The main-line VSWR does not come into play when a measurement is made in the coupled direction. Thus, the main-line VSWR could be, for example, 1.20, but if the directivity is greater than 40 dB, a measurement can be made to better than 1.02 at the coupled port.