LOW PHASE NOISE SATCOM SYNTHESIZER

MFS SERIES: <16.88 GHz

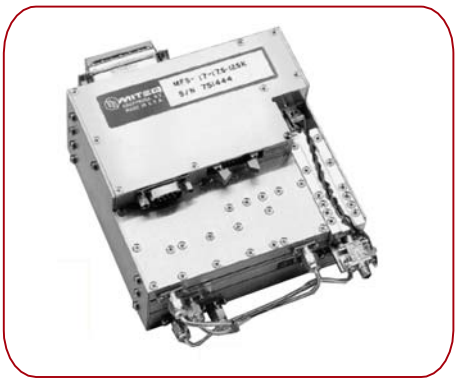

FEATURES

- **Superior phase noise: 20 dB below INTELSAT phase noise mask**
- **100% environmental screening**
- **Options for extended bandwidths**

GUI INTERFACE (for serial programing):
Now available at
http://amps.miteq.com/Amps2007/synthesizers/SynthControl.zip

TYPICAL PHASE NOISE

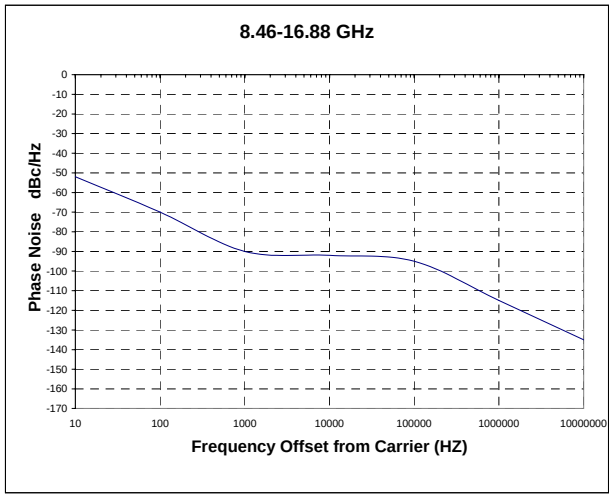

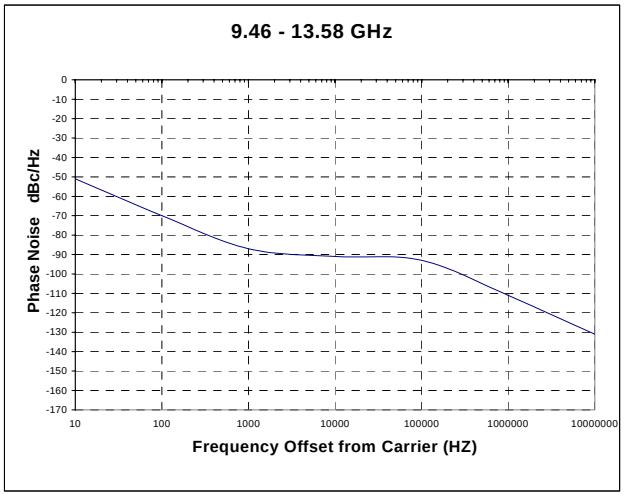

MECHANICAL SPECIFICATIONS

Outline drawings:

8.46 – 13.58 GHz..... 125 kHz step size:
121226
119455
1 kHz step size:
179862
120001

9.46 – 16.88 GHz..... 125 kHz step size:
169302
1 kHz step size:
140069

Weight
> 125 step size ..... 3 pounds typical
< 125 step size ..... 4.6 pounds typical

RF connectors ..... SMA female
DC power/control connectors..... Refer to outline drawings

ENVIRONMENTAL SPECIFICATIONS

Temperature
Operating (surface)..... 0 to +60°C
Storage ..... -55 to +95°C

Humidity.....Up to 95% at 40°C noncondensing
Shock (survival) ..... 30 Gs, 10 ms pulse
Vibration (survival) ..... 20 to 2000 Hz random to .04 G^2/Hz
Altitude .....Up to 13,500 feet
100% testing..... Frequency range
Output power
Discrete power
Spectral purity
Phase bursts
Alarm and monitors
100% screening.....Temperature cycle/monitor

MITEQ
100 Davids Drive, Hauppauge, NY 11788 • TEL: (631) 439-9220 • FAX: (631) 436-7430 • www.miteq.com

LOW PHASE NOISE SATCOM SYNTHESIZER

SPECIFICATIONS

Output frequency range	9.46 - 10.52 GHz 10.91 – 11.53 GHz 11.46 – 12.03 GHz 12.71 – 13.53GHz 12.72 – 13.79 GHz 13.21 – 13.58 GHz	*8.46 - 9.97 GHz *8.71 – 10.52 GHz *9.45 - 11.25 GHz *11.46 - 13.28 GHz *12.97 - 14.29 GHz *12.72 – 14.87 GHz *12.97 – 13.79GHz *16.01 – 16.88 GHz
Step size	Down to 1 kHz	
Tuning speed (to w/in 10°RMS)	10 ms typical / 100 ms maximum	
Output power	+13 dBm minimum	
Output power variation	±1.5 dB maximum	
Input reference frequency	5 or 10 MHz	
Input power level	0 ±3 dBm	
Spurious outputs* In-band Out-of-band	 -70 dBc minimum -65 dBc minimum	
Phase noise	See graphs	
Offset from carrier 10 Hz 100 Hz 1 kHz 10 kHz 100 kHz 300 kHz 1 MHz 10 MHz	 -52 dBc -70 dBc -90 dBc -92 dBc -95 dBc -95 dBc -115 dBc -135 dBc	 -51 dBc -70 dBc -87 dBc -91 dBc -93 dBc -93 dBc -111 dBc -131 dBc
Harmonic output	-20 dBc typical	
Output impedance	50 ohm nominal	
Load VSWR	1.5:1 maximum, all phases	
Regulation	±5%	
Noise and ripple	10 mV p-p maximum	
Frequency control	BCD, TTL, parallel lines or serial RS422	
Summary alarm	In-lock TTL high	
VCO lock voltage	2 – 15 volts	
DC power requirements > 125 kHz step size < 125 kHz step size	 +20/+15 volts, 1 amp typical +5.2 volts, 0.8 amps typical +20/+15 volts, 1.2 amps typical +5.2 volts, 1.1 amps typical	

Extended bandwidths beyond standards are optional, spurious for extended tuning range:
-60 dBc out-of-band and -15 dBc harmonics.

ORDERING INFORMATION

MFS - □□.□□□- □□.□□□ -□□□ □ - □□□M - _____

Start Freq. GHz | Stop Freq. GHz | Step Size (MHz/KHz) | Ref. Freq. MHz | Interface (parallel, serial)

MITEQ
100 Davids Drive, Hauppauge, NY 11788 • TEL: (631) 439-9220 • FAX: (631) 436-7430 • www.miteq.com

OUTLINE DRAWINGS

(8.46 – 16.88 GHz):

121226
MFS SERIES (125kHz STEP SIZE)

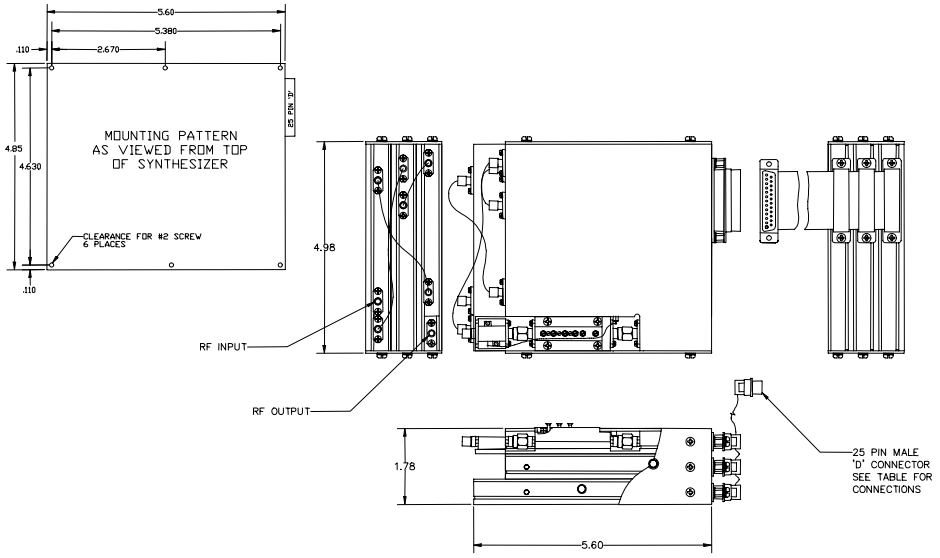

INTERFACE CONNECTIONS	
PIN 1	GROUND
PIN 2	+20 VDC INPUT
PIN 3	+5.2 VDC INPUT
PIN 4	TEST POINT
PIN 5	TTL ALARM
PIN 6	PHASE VOLTAGE
PIN 7	100 MHz (8)
PIN 8	100 MHz (4)
PIN 9	100 MHz (2)
PIN 10	100 MHz (1)
PIN 11	10 MHz (8)
PIN 12	10 MHz (4)
PIN 13	10 MHZ (2)
PIN 14	GROUND
PIN 15	+20 VDC INPUT
PIN 16	+5.2 VDC INPUT
PIN 17	10 MHz (1)
PIN 18	1 MHz (8)
PIN 19	1 MHz (4)
PIN 20	1 MHz (2)
PIN 21	1 MHz (1)
PIN 22	125/100 KHz (8)
PIN 23	125/100 KHz (4)
PIN 24	125/100 KHz (2)
PIN 25	125/100 KHz (1)

179862
MFS SERIES (1 kHz STEP SIZE)

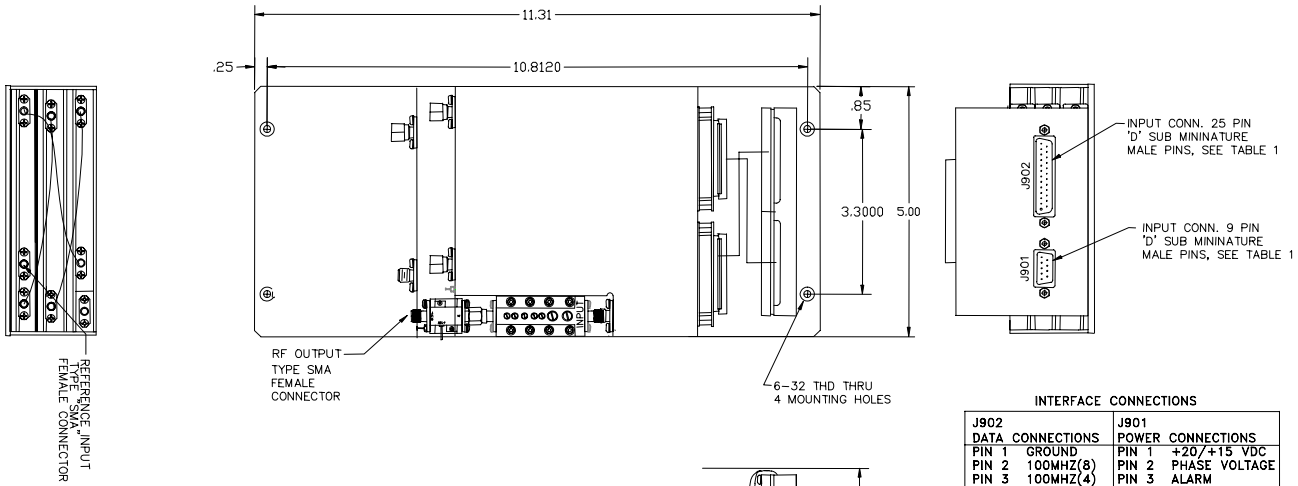

INTERFACE CONNECTIONS

J902 DATA CONNECTIONS	J901 POWER CONNECTIONS
PIN 1 GROUND	PIN 1 +20/+15 VDC
PIN 2 100MHZ(8)	PIN 2 PHASE VOLTAGE
PIN 3 100MHZ(4)	PIN 3 ALARM
PIN 4 100MHZ(2)	PIN 4 +5.2 VDC
PIN 5 100MHZ(1)	PIN 5 GROUND
PIN 6 10MHZ(8)	PIN 6 +20/+15 VDC
PIN 7 10MHZ(4)	PIN 7 TTL ALARM
PIN 8 10MHZ(2)	PIN 8 +5.2 VDC
PIN 9 10MHZ(1)	PIN 9 GROUND
PIN 10 1MHZ(8)	
PIN 11 1MHZ(4)	
PIN 12 1MHZ(2)	
PIN 13 1MHZ(1)	
PIN 14 100KHZ(8)	
PIN 15 100KHZ(4)	
PIN 16 100KHZ(2)	
PIN 17 100KHZ(1)	
PIN 18 10KHZ(8)	
PIN 19 10KHZ(4)	
PIN 20 10KHZ(2)	
PIN 21 10KHZ(1)	
PIN 22 1KHZ(8)	
PIN 23 1KHZ(4)	
PIN 24 1KHZ(2)	
PIN 25 1KHZ(1)	

119455
MFS SERIES (8.46 – 13.58 GHz)

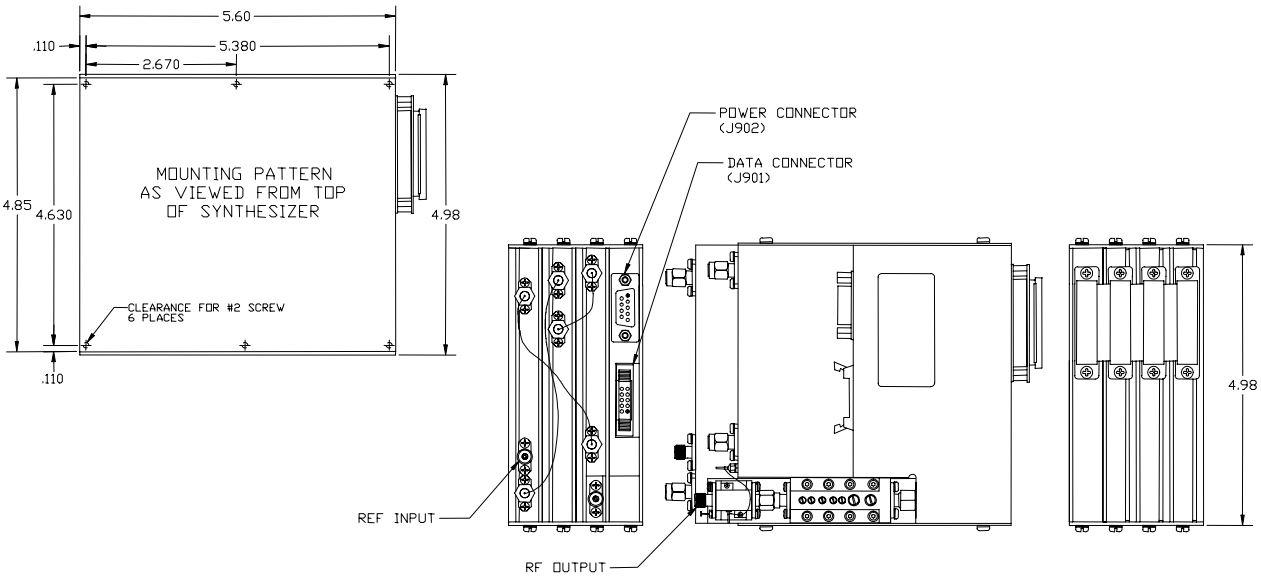

INTERFACE CONNECTIONS	
J901	J902
DATA CONNECTIONS	POWER CONNECTIONS
PIN 1 CLOCK +	PIN 1 +20 VDC/+15VDC
PIN 2 LOAD	PIN 2 PHASE VOLTAGE
PIN 3 CLOCK –	PIN 3 ALARM
PIN 4 LOAD	PIN 4 +5.2 VDC
PIN 5 DATA	PIN 5 GROUND
PIN 6 N/C	PIN 6 +20 VDC/+15VDC
PIN 7 DATA	PIN 7 TTL ALARM
PIN 8 N/C	PIN 8 +5.2 VDC
PIN 9 N/C	PIN 9 GROUND
PIN 10 N/C	

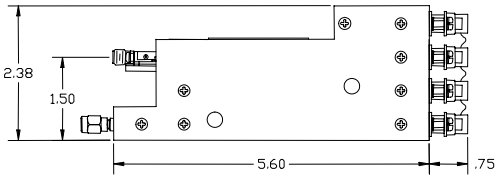

120001
MFS SERIES (8.46 – 13.58 GHz)

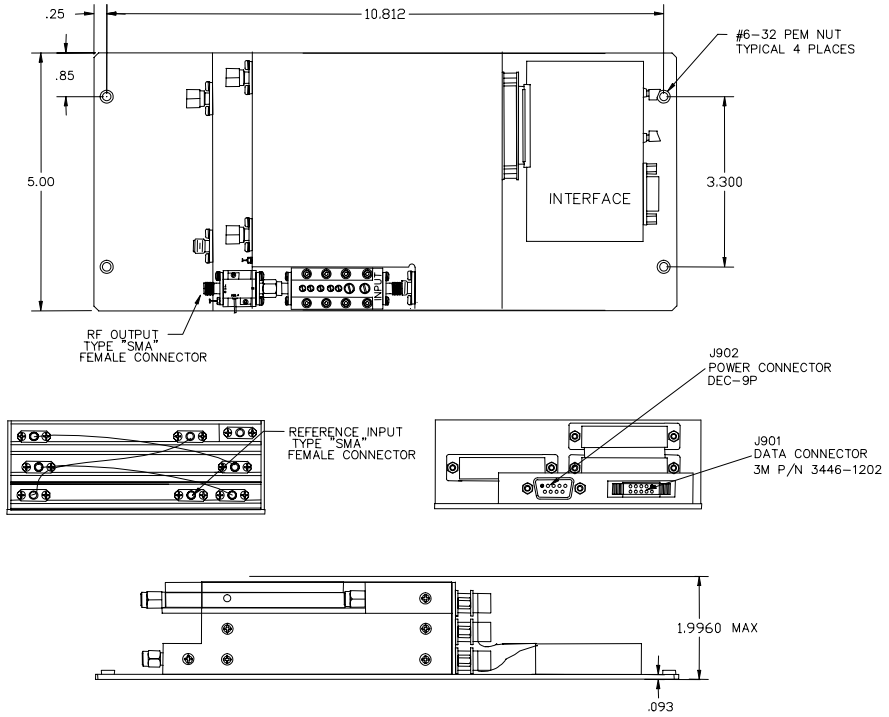

INTERFACE CONNECTIONS	
J901	J902
DATA CONNECTIONS	POWER CONNECTIONS
PIN 1 CLOCK +	PIN 1 +20 VDC
PIN 2 LOAD –	PIN 2 PHASE VOLTAGE
PIN 3 CLOCK –	PIN 3 ALARM
PIN 4 LOAD +	PIN 4 +5.2 VDC
PIN 5 DATA –	PIN 5 GROUND
PIN 6 N/C	PIN 6 +20 VDC
PIN 7 DATA +	PIN 7 TTL ALARM
PIN 8 N/C	PIN 8 +5.2 VDC
PIN 9 N/C	PIN 9 GROUND
PIN 10 N/C	

169302
MFS SERIES (9.46 – 16.88 GHz)

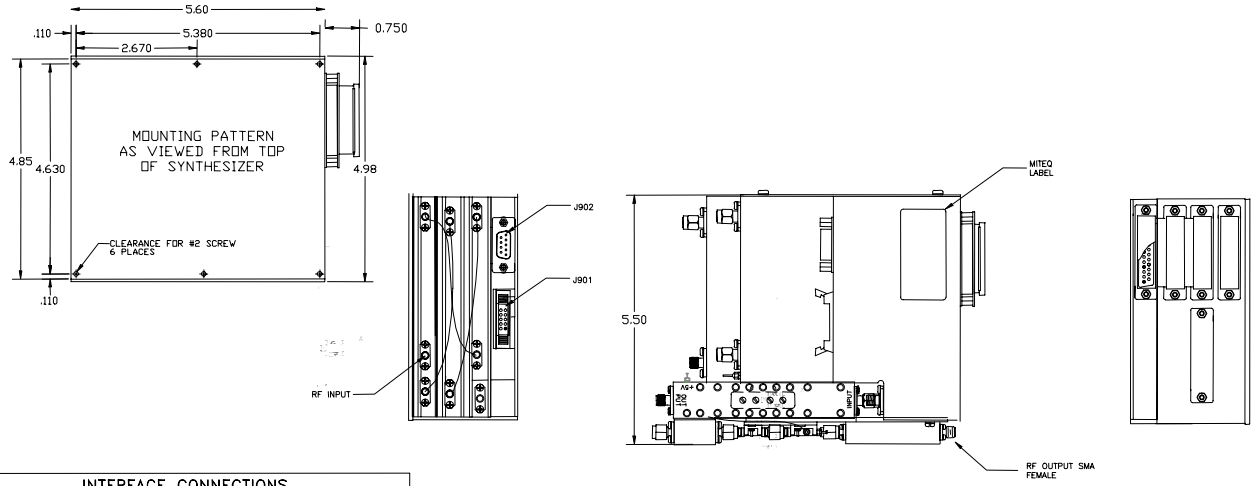

INTERFACE CONNECTIONS	
J901 DATA CONNECTIONS PIN 1 CLOCK + PIN 2 LOAD PIN 3 CLOCK – PIN 4 LOAD PIN 5 DATA PIN 6 N/C PIN 7 DATA PIN 8 N/C PIN 9 N/C PIN 10 N/C	J902 POWER CONNECTIONS PIN 1 +20 VDC PIN 2 PHASE VOLTAGE PIN 3 ALARM PIN 4 +5.2 VDC PIN 5 GROUND PIN 6 +20 VDC PIN 7 TTL ALARM PIN 8 +5.2 VDC PIN 9 GROUND

140069
MFS SERIES (9.46 – 16.88 GHz)

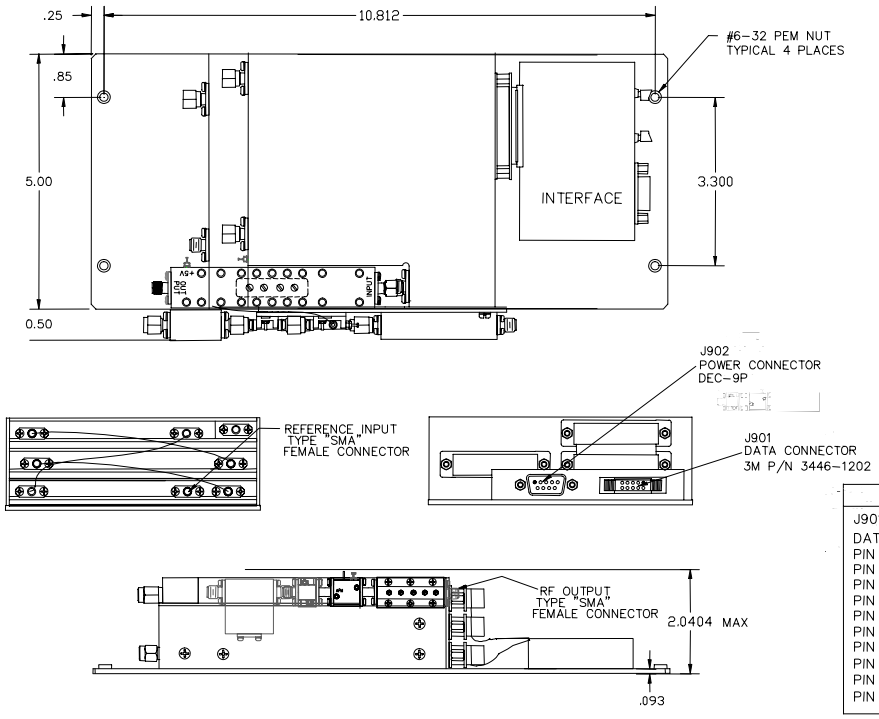

INTERFACE CONNECTIONS	
J901 DATA CONNECTIONS PIN 1 CLOCK + PIN 2 LOAD – PIN 3 CLOCK – PIN 4 LOAD + PIN 5 DATA – PIN 6 N/C PIN 7 DATA + PIN 8 N/C PIN 9 N/C PIN 10 N/C	J902 POWER CONNECTIONS PIN 1 +20 VDC PIN 2 PHASE VOLTAGE PIN 3 ALARM PIN 4 +5.2 VDC PIN 5 GROUND PIN 6 +20 VDC PIN 7 TTL ALARM PIN 8 +5.2 VDC PIN 9 GROUND